INTERNATIONAL JOURNAL OF PROGRESSIVE RESEARCH IN ENGINEERING MANAGEMENT AND SCIENCE (IJPREMS)

www.ijprems.com
editor@ijprems.com

Vol. 04, Issue 07, July 2024, pp: 382-392

e-ISSN : 2583-1062

Impact Factor: 5.725

DESIGN MODIFICATION AND ANALYSIS OF CLEVIS AND PULL-ROD IN ANSYS

K. Monika[1], J. Venkatraman[2], R. Soundarajan[3]

[1]PG Student, Department of Mechanical Engineering, Mahendra Engineering College (Autonoumous), Namakkal, Tamilnadu, India-637503.

[2,3]Assistant Professor, Department of Mechanical Engineering, Mahendra Engineering College (Autonoumous), Namakkal, Tamilnadu, India-637503,

ABSTRACT

Pull-rod and clevis assembly is one of the most important part in single plate clutch. It is used for connecting a clutch pedal hydraulic cylinder output to clutch plate. Which is act as an engaging and disengaging lever in clutch plate assembly. While press the clutch plate Tensile and compression load act on the clevis and pull rod assembly. The yield strength of the material is one of the controlling factors in determining the optimum load for a pull rod and clevis connection. In clutch plate pull rod and clevis assembly is mainly made of steel and aluminium alloys (for light weight and absorb impact loads) or composite materials, composite materials is a material made from two or more constituent materials with significantly different physical or chemical properties that, when combined, produce a material with characteristics different from the individual components.

The individual components remain separate and distinct within the finished structure. The new material may be preferred for many reasons: common examples include materials which are stronger, lighter, or less expensive when compared to traditional materials. As a pull rod and clevis unit it may transmit pull and push force to engage and disengage the clutch, in which it undergoes structural deformations. Thus, in this project we are modifying a pull rod and clevis unit in CRE-O design software and doing static structural analysis in ansys work bench 15.0 software by using advance materials. Thus, the part which is modeled is converted into IGES file to import in ansys work bench and static structural analysis is carried out at 10 kN of pressure load by applying various materials such as Aluminium Alloy and special alloy steel materials used in this project. This analysis helps to understand the stresses, strains, and total deformation which are focused on pull rod and clevis unit. Also, the factor of safety is determined. These parameters can facilitate deciding if this component is safe for use.

KEYWORDS: Pull rod, CRE-O, Ansys, Clevis, Clutch plate, IGES.

1. INTRODUCTION

1.1 Clutch plate assembly

A clutch is basically a device that is operated to transfer power, providing a smooth motion. The transfer happens from one component (the driving member) to another (the driven member). Clutch device are mainly designed and engineered to transfer the maximum torque while maintaining minimal heat generation.

Its counterpart in function is the brake. Multi-plate clutches are employed when transmitting large torques is necessary. Inner discs are affixed to the driven shaft to allow for axial movement within the clutches while outer discs, fastened to the housing keyed to the driving shaft, are secured by bolts. This design is widely utilized in automobiles, motorcycles, and machine tools. Inner disc plated are commonly constructed from steel, while outer discs are typically made of bronze. Friction surfaces are lined with materials such as asbestos, cork, rubber, and cast iron.

They also enable disconnection of the engine from the transmission for gear changes, ensuring smooth engagement to absorb powerful engine power fluctuations, thus preventing their transmission through the driveline. This capability is achieved through meticulous design utilizing both static and kinetic friction. Various materials which are suitable for clutch plates includes gray cast iron, cork, SF-BU, Kevlar49(high-modulus type), SF001(polyenes) , sintered iron, pressed asbestos, aluminium 6061, steel and bronze.

There are primarily two types of clutches: Single-plate clutches are used for light-duty vehicles and Multi-plate clutches with multiple friction and steel plate assemblies are used in cases of heavy-duty vehicles.

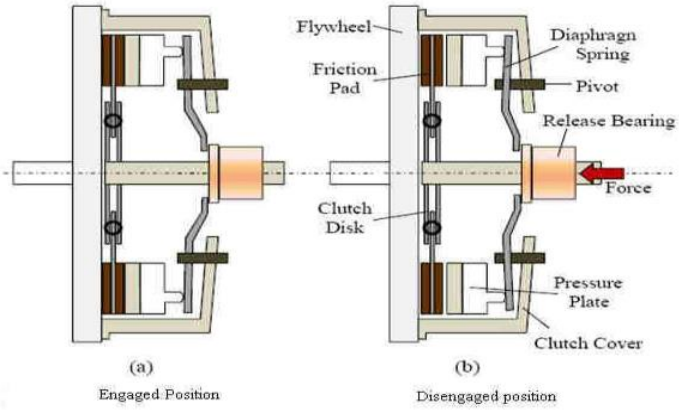

Fig.1.1 Clutch plate assembly. (a)Engaged (b)Disengaged position

Here Fig(a) Illustration of the clutch plate engagement position. The engine's power is transferred to the clutch and then to the transmission when the clutch pedal is engaged with the flywheel.

Fig(b) Illustration the clutch plate disengagement, which prevents power from being sent to the transmission.

A clutch is a mechanical component utilized on transmission shafts. Positioned between these shafts are known as friction plates, can also be referred to as clutch plates. Together, these components form the clutch assembly system as illustrated in Figure 1.1.

The operating principle of a clutch system relies on friction. When two friction surfaces are brought into contact and pressed together they adhere due to the frictional force between them. This fundamental principle of clutch operation depends on factors such as the contact surface area, the applied pressure, and the properties of the friction material used between the surfaces.

The clutch comprises of two main components: the driving member called flywheel which is mounted on the engine crankshaft, and the driven member, which is the pressure plate connected to the driving shaft leading to the driven shaft. This arrangement allows the driven shaft to be started or stopped independently of the driving shaft, without affecting the engine's operation.

The clutch operates in three distinct states: disengaged, clutch slipping, and engaged. In automobiles, a gearbox is essential for adjusting the vehicle's speed and torque. It can cause wear and tear on the gears while changing gears when the engine is connected to the gearbox and the gears are in motion. To prevent this issue, a clutch is positioned between the gearbox and the engine.

The clutch serves as the initial component in the power train. Its primary role is to enable the engine to be either engaged or disengaged from the transmission as required by the driver or during gear shifts. When the clutch is engaged, power transfers from the engine to the wheels. Conversely, when the clutch is disengaged, power transmission ceases, as discussed by Zhao et al.

In automotive contexts, friction clutches connect the engine to the drive shaft, allowing smooth engagement and disengagement. The design goal in this study is to develop a robust friction clutch system that satisfies various objectives, including structural strength.

Friction clutches operate by utilizing the force of friction to initiate movement of the driven shaft from rest and gradually bring it up to speed, minimizing excessive slipping of the friction surfaces.

The clutch system consists of three major components: the clutch disc, flywheel, and pressure plate.

The flywheel is directly connected to the engine's crankshaft which rotates at engine RPM. The pressure plate is spring-loaded to hold the clutch assembly together and release tension for free rotation. It is bolted to the flywheel. Placed between the flywheel and pressure plate, the clutch disc features friction surfaces that engage with the metal surfaces of the flywheel and pressure plate, facilitating smooth operation.

During engagement operation, contact pressure between these surfaces increases gradually until reaching maximum value at the end of the slipping phase, maintaining steady pressure throughout full engagement. Heat generated during slipping is dissipated through conduction between clutch components and convection to the environment, adhering to the principles of thermodynamics.

Additionally, the design considers the vibration characteristics of the clutch plate during full engagement, aiming to prevent resonance with engine and transmission components that experience dynamic loads during normal operation. This holistic approach ensures the clutch system operates efficiently and reliably in automotive applications as shown by Fig.1.2.

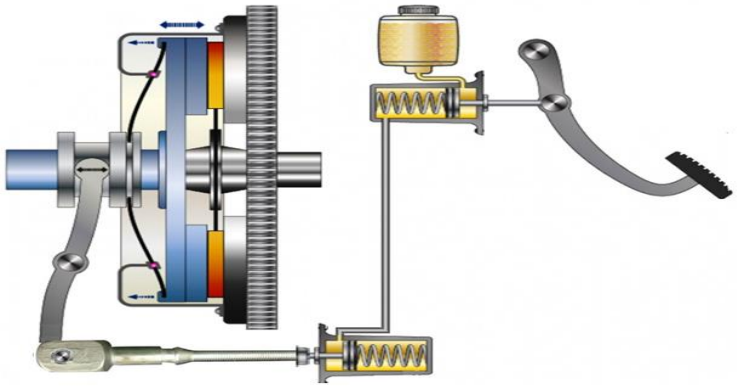

Fig 1.2 Line diagram of clutch plate

1.2 Single Plate Clutch for tractor

A single-plate clutch is more powerful type of clutch which consists of a single flat circular plate is positioned between the inner face of the flywheel and a clamping plate. This clamping plate grips the clutch plate using clamping levers that are actuated by strong springs.

Fig 1.3 Single plate clutch for tractor

The magnitude of torque a clutch can transmit depends on its geometry, the magnitude of the actuating force applied, and the condition of contact between its members. When a uniform pressure is applied evenly over the contact area, the members remain together under uniform pressure conditions, allowing for analysis based on uniform wear.

However, it's important to note that uniform pressure conditions may not always be maintained, leading to variations in the contact conditions over time. Therefore, the analysis presented here focuses on the assumption of uniform wear conditions.

1.3 Types of clutches

There are two main types of clutches commonly used in engineering aplications:

Positive clutches and Friction clutches

1.3.1 Positive clutches

Positive clutches are employed when a direct and reliable drive is needed. A jaw clutch operates by allowing one shaft to drive another through the direct engagement of interlocking jaws. This type typically consists of two parts: one is permanently attached to the driving shaft using a sunk key and the other half is a movable part fixed on the driven shaft which is capable of sliding axially but prevented from rotating relative to its shaft by a feather key.

There are two main types of jaw clutches:

1. Square Jaw Clutch: This type of clutch are used in applications where engagement and disengagement during motion and load are not required. It can transmit power in both directions of rotation.

2. Spiral Jaw Clutch: This type of clutch are either left-hand or right-hand oriented. They transmit power effectively in only one direction. This design is appropriate for applications where the clutch needs to be engaged or disengaged while in motion.

Jaw clutches are frequently used in connecting components like sprocket wheels, gears, and pulleys. In such cases, the non-sliding part is often integrated with the hub for robustness and reliability.

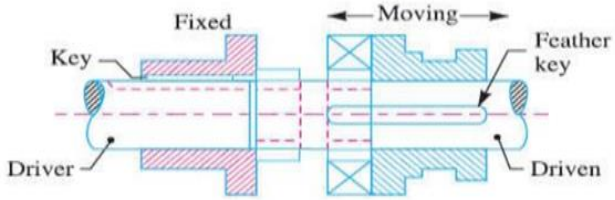

Fig.1.4 Square jaw clutch

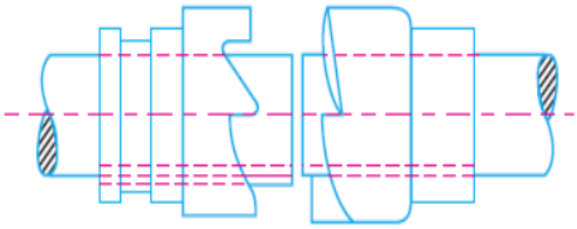

Fig.1.5 Spiral jaw clutch

1.3.2 Friction clutches

Frictional clutches utilizes frictional force to initiate motion of the driven shaft from rest and gradually bring it up to the desired speed, minimizing excessive slipping between the friction surfaces. In automobiles, a friction clutch connects the engine to the drive shaft, enabling smooth engagement and disengagement.

A friction clutch is mainly used in applications where the power transmission involves shafts and machines that require frequent start and stop function. It is also suitable for situations where power needs to be delivered to operating machines under partial or full load conditions.

It is essential to ensure that the friction surfaces engage smoothly when operating such a clutch, ensuring the driven shaft to reach the proper speed gradually. The alignment of bearings need to be properly placed close to the clutch for efficient operation.

For efficient operation consider the following:

1. Frictional Force Development: The contact surfaces should generate enough frictional force to pick up and hold the load with minimal pressure between them.

2. Heat Dissipation: Heat generated by friction should dissipate rapidly to prevent overheating and minimize the tendency of the clutch to grab.

3. Material Stiffness: The backing material behind the friction surfaces should be sufficiently stiff to ensure a uniform distribution of pressure.

These factors contribute to the effective performance and longevity of friction clutches in various industrial and automotive applications.

1.4 Clutch construction

The clutch serves as the initial component in the drivetrain that receives power directly from the engine crankshaft. Its basic function is to enable the driver to regulate the power transmission from the engine and to the transmission or transaxle. To comprehend how a clutch operates, it's essential to understand its various components and their roles. This knowledge becomes particularly valuable when diagnosing and performing maintenance or repairs on the clutch assembly.

1.4.1 Clutch Release Mechanism

This mechanism enables the operator to adjust or control the clutch. Typically, it comprises the clutch pedal setup and can utilize either a mechanical linkage or a hydraulic system.

In a hydraulic clutch release mechanism (shown in fig. 1.6), a straightforward hydraulic system transfers the action of the clutch pedal to the clutch fork. This system comprises three primary components:

1. Master Cylinder: This component is operated by the clutch pedal. When the pedal is pressed, the master cylinder generates hydraulic pressure

2. Hydraulic Lines: These are the conduits through which hydraulic fluid flows from the master cylinder to the slave cylinder.

3. Slave Cylinder: This cylinder receives hydraulic pressure from the master cylinder through the hydraulic lines. The pressure exerted by the hydraulic fluid inside the slave cylinder actuates the clutch fork, thereby engaging or disengaging the clutch.

Hydraulic clutch release mechanisms are favored for their smooth and efficient operation, providing precise control over clutch engagement compared to mechanical linkages or cables.

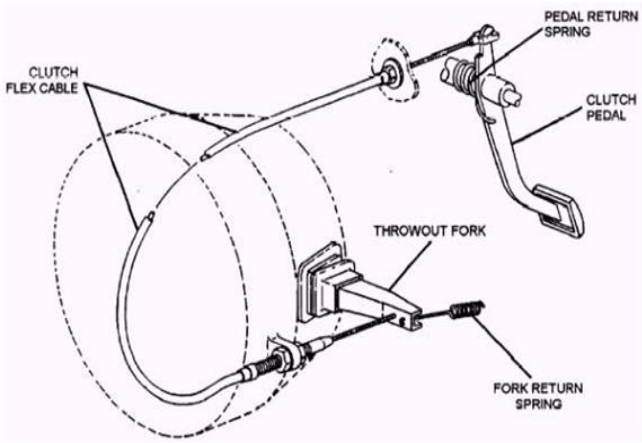

Fig. 1.6 Clutch Release Mechanism

1.4.2 Clutch fork

The clutch fork or clutch arm plays a crucial role in transmitting motion from the release mechanism to both the release bearing and the pressure plate. Positioned through a square hole in the bell housing, the clutch fork is mounted on a pivot. Its primary function is to actuate the release bearing by leveraging against it, thereby disengaging the clutch.

To protect the clutch assembly from external contaminants, a rubber cover is fitted over the clutch fork. This boot serves the important purpose of preventing road debris such as dirt, small rocks, water, oil and other such particles from entering the clutch housing.

1.4.3 Release Bearing

The release bearing comprises a ball bearing and collar assembly intended to reduce friction between the pressure plate levers and the release fork. It is engineered to slide along a hub sleeve extending from the front of the manual transmission or transaxle.

This component is sealed and pre-filled with lubricants to guarantee smooth operation.

The release bearing is positioned over the end of the clutch fork during installation and secured in place by small spring clips. As the clutch fork moves in both direction, it causes the release bearings to slide along the transmission hub sleeve. This movement allows the release bearing to engage or disengage the clutch by exerting pressure on the pressure plate levers.

1.4.4 Pressure Plate Clutch Housing

The Pressure Plate clutch provides a housing for the manual transmission, which bolts directly to its rear. At the lower front of the housing, a metal cover is placed that can be removed to inspect the flywheel ring gear or when separating the engine from the clutch assembly. A hole in the corner side of the housing accommodates the clutch fork. Clutch housings are constructed from materials such as aluminum, magnesium, or cast iron.

There are two primary types of pressure plates:

1. Coil Spring Type: This type of pressure plate comprises of a set of coil springs to exert pressure on the clutch disc, engaging or disengaging it from the flywheel.

2. Diaphragm Type: A diaphragm spring replaces the coil springs in this type of pressure plate. It offers more even pressure distribution over the clutch disc and generally requires less pedal effort to operate.

Both types of pressure plates serve the function of engaging or disengaging the clutch disc from the flywheel, enabling smooth operation of the clutch system in vehicles.

1.4.5 Coil spring pressure plate

The pressure plate in a clutch assembly employs small sized coil springs which look similar to a valve springs. Its front part is a large, flat ring that makes contact with the clutch disc during the engagement process. On the rear side of the pressure plate, there are pockets for these coil springs and brackets that hinge the release levers.

During operation, the pressure plates slides or moves back and forth within the clutch cover. The release levers which are hinged inside the pressure plate, actuate by rubbing against it to move the pressure plate facing away from the clutch disc and flywheel. Thereby this process disenges the clutch. A small clip-type springs are placed around the release levers to prevent rattling or vibrations when fully released.

Cover's primary function is to securely hold these components together. The holes located around the outer edge of the cover enable the pressure plate assembly to be securely fixed to the flywheel, ensuring proper and smooth clutch operation.

1.4.6 Diaphragm pressure plate

In a clutch assembly utilizing a diaphragm-type pressure plate, a single diaphragm spring replaces the multiple coil springs typically found in coil spring-type pressure plates. The diaphragm spring functions similarly to the coil spring type but operates with a different mechanical design.

Generally diaphragm type spring itself is a large, round disc made up of spring steel. It is bent or dished forming pie-shaped segments that runs from the outer edge towards the centre. This design allows the diaphragm type spring to flex when pressure is applied.

The diaphragm type spring is mounted inside the pressure plate keeping its outer edge in contact with the back of the pressure plate face. The outer rim of the diaphragm type spring is securely attached to the pressure plate and pivots on rings, known as the pivot rings, located approximately one inch from the outer edge. These pivot rings allow the diaphragm spring to pivot and flex when the clutch pedal is depressed, thereby engaging or disengaging the clutch.

Overall, the diaphragm-type pressure plate simplifies the clutch assembly by using a single spring mechanism while still providing effective engagement and disengagement of the clutch disc from the flywheel.

1.5 Clutch pedal assembly

The clutch pedal assembly consists of a support bracket designed to securely mount both a clutch arm and an actuator arm. The clutch arm contains a pedal that allows the vehicle operator to engage it, while the actuator arm is still connected to a linkage responsible for controlling the master cylinder in a hydraulically actuated clutch release system. These two arms are linked together through a pair of drag links, ensuring that when the operator actuates the clutch arm, the actuator arm responds in kind. This setup allows for coordinated operation between the clutch pedal and the hydraulic system, facilitating smooth engagement and disengagement of the clutch as required by the driver.

1.6 Use of clutch pedal assembly

In conventional motor vehicles, such as those equipped with internal combustion engines, power generated from the engine is transmitted to the wheels via a transmission system, enabling various speed ratios. Two common types of transmissions are manual and automatic. In manual transmissions, a clutch system is an integral part used for disengaging the engine from the transmission during gear shifts. This clutch mechanism is operated by the vehicle operator via a clutch pedal assembly which is located in the vehicle's occupant compartment.

There is a growing industry preference for a clutch pedal assembly that supports both cable and hydraulic actuation systems without requiring separate designs. This approach allows an automobile design to accommodate either a cable operated clutch system or a hydraulically operated clutch system without additional modifications. By eliminating the need for redundant designs, manufacturing costs can be reduced significantly.

This adaptable clutch pedal assembly not only enhances manufacturing efficiency but also provides flexibility in vehicle design and production. It ensures that vehicles can incorporate either type of clutch actuation system based on market demands or engineering preferences, streamlining production processes and potentially reducing overall vehicle costs.

Fig. 1.8 Pull rod clevis unit in clutch pedal assembly

1.7 Pull rod and clevis assembly

MIG welding is employed to connect the clevis and pull rod assembly. Additionally, a shielding gas is directed through the welding gun to safeguard the weld pool from contamination.

This process involves an arc welding technique where a continuous solid structured wire electrode is fed through a welding gun and into the weld pool by effectively joining the two base materials together.

The term "MIG" stands for metal inert gas, reflecting the use of inert gases such as argon or helium in the welding process to shield the weld from atmospheric gases that could compromise its integrity.

1.8 Welding defects in pull rod assembly

Welding defects occur during welding operations primarily due to inadequate techniques employed by inexperienced or untrained welders, or as a result of structural issues within the welding process itself. These defects manifest as variations in the size and shape of the metal structure being welded. Such variations can stem from incorrect welding processes or the application of inappropriate welding procedures.

2. PULL ROD FUNCTION

The pull rod serves to connect the hydraulic piston to the clutch hub in a clutch assembly. A rod, in general terms, can be likened to a bar or stick, such as curtain rods or steel rods used in building structures to enhance stability. It can also refer to a staff, akin to a walking stick, or a metal bar utilized in construction projects.

In the context of the clevis and pull rod assembly, the clevis has a take-up that allows the rod to be screwed in to tighten the assembly. This adjustment, while not as extensive as a turnbuckle, can still be several inches depending on the size of the clevis and pin. It's possible to extend the assembly by approximately an inch, but it's crucial to ensure the entire neck of the clevis remains engaged with the threads to maintain the assembly's integrity. The connection between the pull rod and clevis involves threading and welding.

Welding is a fabrication process which causes two parts to fuse together upon heating and later upon cooling. These methods are commonly for various metals. Upon completion, the fused joint is referred to as a weld.

The pull rod and clevis assembly plays a important role in the single plate clutch system. It establishes a connection between the hydraulic cylinder output from the clutch pedal and the plate. This assembly acts as the lever for engaging and disengaging the clutch plate. When the clutch pedal is pressed, the clevis and pull rod assembly experience both tensile and compressive loads, crucial for the clutch plate's operation and functionality.

Fig. 2.1 Pull rod with clevises

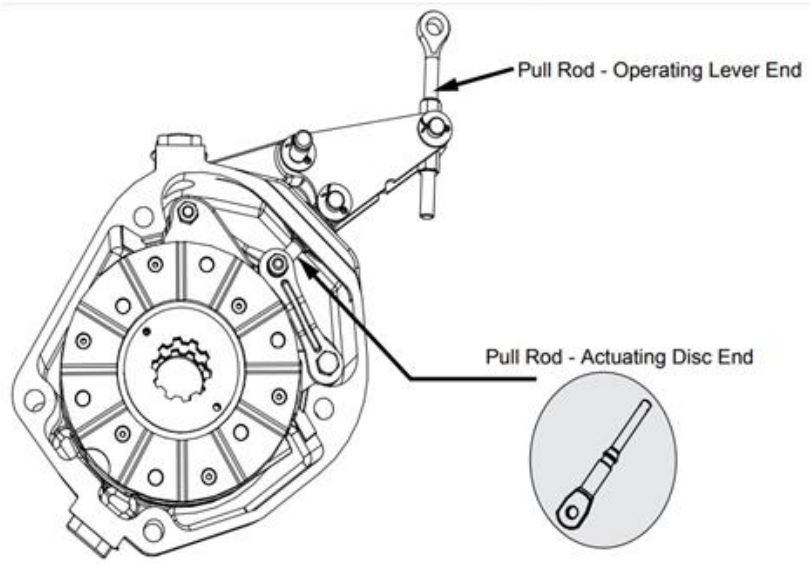

Fig. 2.2 Schematic view of Pull rod assembly

2.2 Clevis

A clevis fastener consists of two main parts:

A clevis and a clevis pin. The clevis is designed U-shaped piece with holes at the ends of its prongs designed to accommodate the clevis pin. This pin resembles a bolt but is either partially threaded or unthreaded, featuring a cross-hole for securing with a split pin or cotter pin.

Sometimes, a tang is inserted into the space inside the clevis and secured using clevis pin. This combination of a clevis and pin is often referred to as a shackle, although a shackle can take various forms beyond just the clevis and pin setup.

Clevis fasteners find wide application across different industries including farming equipment, sailboat rigging, automobiles, aircrafts, and constructions. As part of a fastening system, a clevis enables rotation along certain axes while restricting rotation along others, making it versatile for various mechanical and structural applications.

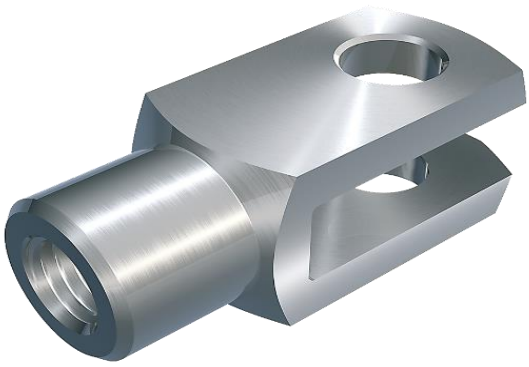

Fig. 2.3 Clevis

Tensile and compressive load acting on the clutch plate simultaneously due to poor welding joint the assembly unit may broken, below figure shows the broken view of pull rod and clevis assembly.

2.2.1 Analysis of the cause of the fracture of the pull rod

1. Fatigue failure

The working principle of an injection moulding machine is the process of alternating stress so that any factor which causes stress concentration may cause fatigue failure.

For example:

1) A sudden change in shaft diameter.
2) Abrupt transitions lacking fillets or with undercuts.
3) Surface scars or machining errors damaging the optical axis surface.
4) Excessive surface roughness on threads.
5) Long-term thread pressing causing surface extrusion damage (e.g., at the die adjusting nut) due to inadequate surface strength.
6) Stress concentration resulting from improper heat treatment of thread surfaces.
7) Material defects.

Fig. 2.4 (a) and (b) Broken part of pull rod and clevis

2. Overload pull off

The elbow rod type relies on the deformation of four pull rods to achieve locking force. If the lengths of these four rods vary, their deformation will also differ. A shorter rod may end up bearing more than its share of the locking force, potentially causing it to break.

3. Temperature strain leads to breaking

If four tie rods differ in length, such as having one long and three short ones, the longer tie rod may break due to thermal stress. This stress arises from sharp temperature changes and is exacerbated by the constraints imposed by the shorter rods.

4. Tensile failure caused by composite strain

Uneven dies can lead to significant errors in the lengths of connecting rods (hinge edges), bearing pedestal heights, and tie rods. This imbalance causes uneven forces when the connecting rod extends.

1) The rear formwork may swing, causing the pull rod to bend and potentially pull off due to bending and tensile stresses.

2) Inexperienced operators may inadvertently increase the locking force, resulting in rod tension overload and deformation of the mold due to overload.

5. Damage caused by instantaneous impact stress

Since the elbow bar can release the locking force before the die opens, it allows for the force to be released gradually.

1) Rapid release during the opening phase can create machine vibrations and damage the pull rod and other components.

2) Prolonged stress in the entire die closing mechanism, including the mold, can lead to premature fatigue failure.

3. DESIGN SETUP

3.1 Existing design in pull rod assembly

Existing and Modified model of Pull rod and clevis assembly is shown in fig 4.1 and 4.2

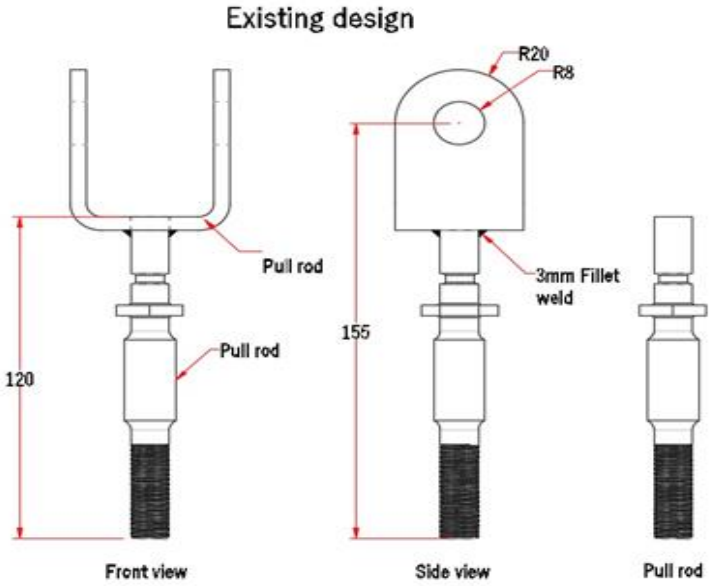

Fig.3.1 Existing pull rod design

3.2 Modified design in pull rod assembly

In the modified model, we added a step on top of the pull rod and reinforced it with welding on both sides. This enhancement strengthens the pull rod assembly. Additionally, we verified the design modification using analytical methods in ANSYS software.

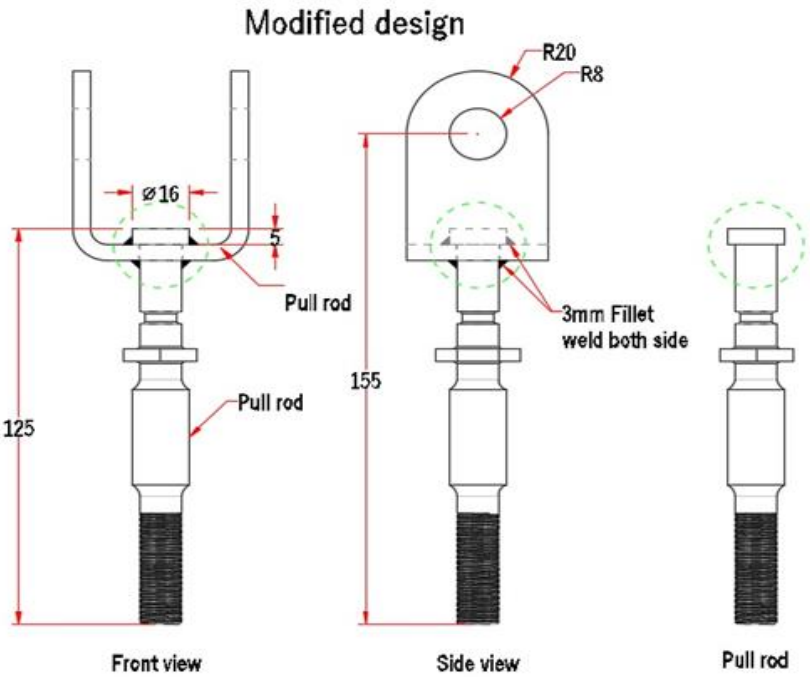

Fig.3.2 Suggested pull rod and clevis design

4. MODELLING IN CRE-O

Creo is a Computer-aided design (CAD) app that is used for product design for discrete manufacturers and it is developed by PTC. The package consists of various tools or apps that provides a unique set of capabilities for a user in a designing field.

Developer : PTC
Initial release : 2011

4.1 Existing pull rod and clevis design

Fig. 4.1 Existing Clevis design

4.2 Existing pull rod design

Fig. 4.2 Existing pull rod design

4.3 Existing design assembly in creo

Fig.4.3 Existing pull rod

4.4 Modified design Pull rod assembly in creo

Pull rod and clevis models are created and Assembled in creo software Individual parts image listed below.

Fig.4.4 Modified pull rod Assembly

ANSYS is software used for finite element analysis (FEA), a method that breaks down complex systems into small elements. It solves equations governing element behaviour to explain how the entire system behaves.

Static Analysis in ANSYS calculates displacements, stresses, etc., under static loads, handling both linear and nonlinear scenarios like plasticity, stress stiffening, and large deflection.

Transient Dynamic Analysis in ANSYS studies how structures respond to time-varying loads, accommodating all the nonlinear behaviours mentioned in Static Analysis.

5. ANALYSIS

5.1 Analysis of existing design

Existing pull rod Assembly Total deformation

Set the Solution to Total Deformation case, Equivalent elastic strain case and Equivalent stress case.

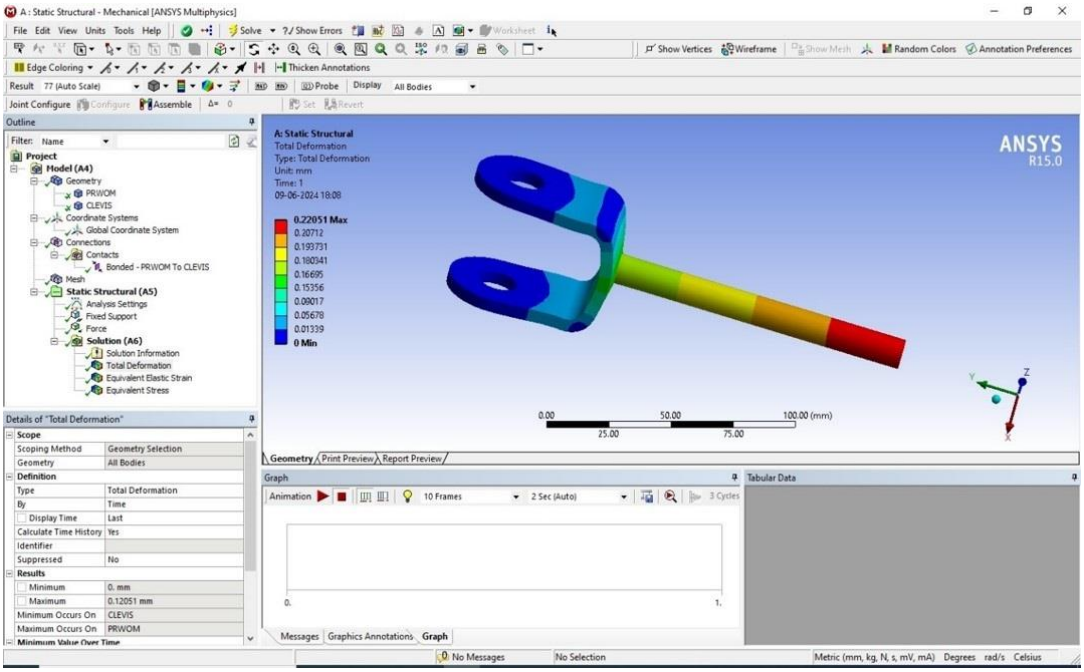

Fig. 5.5 Existing pull rod Assembly Total deformation

6. RESULTS AND DISCUSSION

ANSYS Static Structural Analysis software provides mathematical solutions for analyzing static conditions. It accepts inputs such as moments, forces, and pressures, and outputs results such as displacements, stresses, and strains. This type of analysis determines the effects of steady loading conditions while disregarding inertia and damping effects.

6.1 Analysis of Modified design

Total deformation generated in Modified pull rod Assembly

The Stress generated in the pull rod due to applied load as shown in fig 5.5 and reduced Total deformation of 0.085 mm is found in the modified design as shown in Fig 6.1.

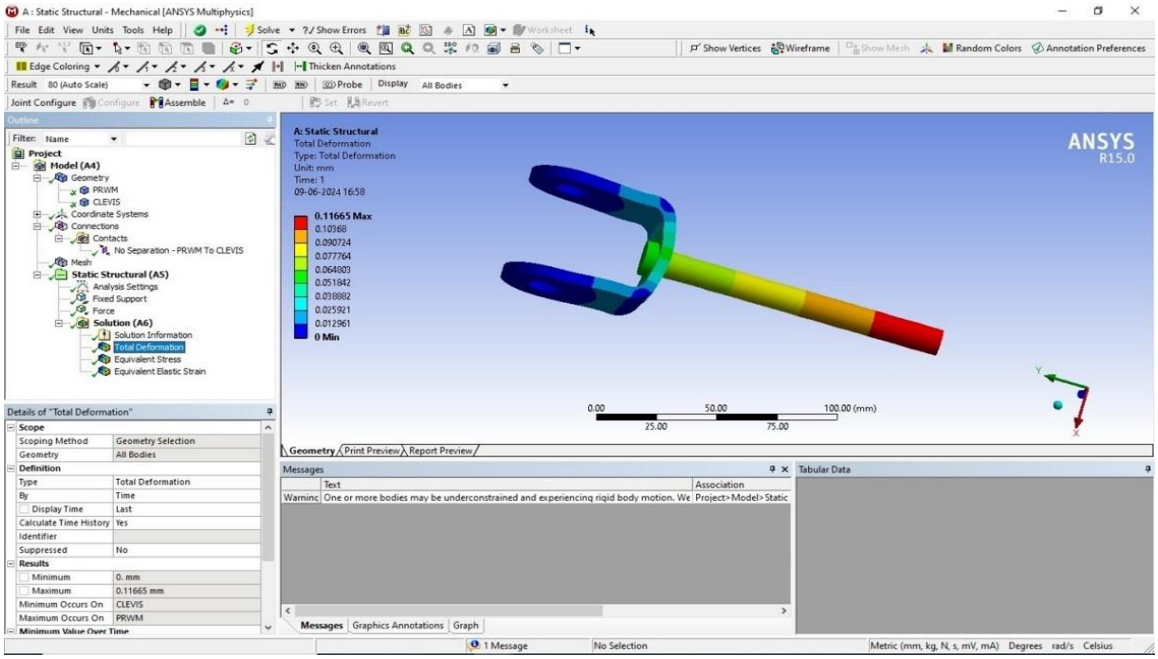

Fig. 6.2 Modified pull rod Assembly Total deformation of pull Rod

7. CONCLUSION

The total stress in the modified design is lower than in the existing one. Therefore, we strongly recommend adopting this design to prevent frequent breakdowns in the clutch plate assembly system when pressing the clutch pedal.

- We anticipate that this change will increase both the quantity and quality of our product.

Conclusions we derived:

- Deformation and stresses in the modified pull rod are within acceptable limits.
- The upper region experiences greater deflection due to lack of support.
- Stress is higher in the existing pull rod because it deforms less.
- The maximum stress occurs at the neck of the pull rod in the lower region.

8. REFERENCES

[1] VS A.B.K Rajan, Dr. Selvakumaran Thunaipragasam, and Jaya Christiyan K.G, "Numerical Analysis of Diesel Engine Component Under Thermal Loading," International Journal of Mechanical Engineering, vol. 7, no. 2, pp. 3271-3276, 2022.

[2] MS Sasikumar, S. Vinodh, and M. Saravana Kumar, "Experimental and Analytical Study of Different Fiber Reinforced Composites with Damage," International Journal of Engineering & Technology, vol.7, no. 10, pp. 207-210, 2018.

[3] AR Vinodh.S and Balamurugan.A, "Comparative Study on the Morphology and Mechanical Properties of Nylon 6 Nanocomposites Prepared Using Three Different Nanoclays," International Journal for Innovative Research in Science, Engineering and …, 2018.

[4] S. Vinodh, R. Sasikumar, A. Rubuck, and NMM Fayas, "Simulation Study and Optimization of Flight Landing Control by Engine RPM," Simulation, vol. 3, no. 1, 2018.

[5] S. Vinodh, A. Bragadeesh, and P. Nishanth, "An Experimental Study of Variable Compression Ratio Engine Using Diesel Blend-A Computing Approach," International Journal of Advanced Engineering, Management and Science, vol. 3, no. 8, 2017

[6] V. B. Bhandari, “Design of Machine Elements”, Tata McGraw-Hill Publishing Co. Ltd., New Delhi, 2008

[7] Bernard Hamrock, “Fundamentals of Machine Elements”, McGraw-Hill Publication, 1999

[8] R. S. Khurmi, J. K. Gupta “A Text Book of Machine Design”, S. Chand Publications, New Delhi 2012

[9] S. R. Majumdar "Oil Hydraulic Systems-Principles and Maintenance", Tata Mc-Graw Hill Publishing Co. Ltd. New Delhi, 2008

[10] PSG Design Data Handbook, 2008

[11] A. G. Naik, N. K. Mandavgade, "FEA Implementation In Analysis And Optimization Of Top And Bottom Frame For Hydraulic Cotton Lint Bailing Press", International Journal of Scientific & Engineering Research Volume 3, Issue 7, 2012

[12] H.N.Chauhan & M.P.Bambhania, "Design & Analysis of Frame of 63 Ton Power Press Machine by Using Finite Element Method", Indian Journal of Applied Research, Vol.:3, Issue:7, pp.285-288, 2013

[13] Ankit H Parmar and et al, "Design and Modification of Foremost Element of Hydraulic Press Machine", International Journal of Advanced Scientific and Technical Research, Issue 4, Vol. 3, 2014

[14] Bhavesh Khichadia, Dipeshkumar Chauhan, "A Review on Design And Analysis of Mechanical Press Frame", International Journal of Advance Engineering and Research Development, Volume 1, Issue 6, 2014

[15] B. Parthiban and et al, "Design and Analysis of C type hydraulic press structure and cylinder", International Journal of Research in Aeronautical and Mechanical Engineering, Vol.2 Issue.3, pp. 47-56, 2014.

[16] D. Ravi, "Computer Aided Design and Analysis of Power Press", Middle-East Journal of Scientific Research 20 (10): pp.1239-1246, 2014

[17] Santoshkumar S. Malipatil and et al, "Analysis and Structural Optimization of 5 Ton H-Frame Clevis", International Journal of Innovative Science, Engineering & Technology, Vol. 1, Issue 5, pp.356-360, 2014

[18] ANSYS User Manual, 2013

[19] Taş, B., "Pull rod design", Master thesis of Institute of Science of Gazi University, (2008), 90 pages.

[20] Arslan, O., "Analysis of an eccentric press body via ANSYS", Thesis of Mechanical Engineering Dept. of Dokuz Eylül University, (2009), 35 pages. [16] Yağbasan, O., "Analysis of a C-type press body using finite element method", Master thesis of Mechanical Eng. Dept. of Eskişehir Osmangazi University, (2010), 77 pages.